Electric powered forklift 6.0 - 8.0 ton

TRIGO 80

TOYOTA MATERIAL HANDLING

toyotamaterialhandling-international.com

Electric powered forklift 6.0 - 8.0 ton

Truck specifications					9FBM60T	9FBM70T	9FBM80T	9FBH80T
Identification	1.1	Manufacturer			Toyota	Toyota	Toyota	Toyota
	1.2	Model			9FBM60T	9FBM70T	9FBM80T	9FBH80T
	1.3	Drive			Electric	Electric	Electric	Electric
	1.4	Operator type			Driver seated	Driver seated	Driver seated	Driver seated
	1.5	Load capacity/rated load	Q	kg	6000	7000	8000	8000
	1.6	Load centre	c	mm	600	600	600	900
	1.8	Load distance, centre of drive axle to fork	x	mm	700	710	715	750
	1.9	Wheelbase	y	mm	2300	2300	2300	2300
Weight	2.1	Service weight		kg	12765	13476	14461	15918
	2.2	Axle load, with load, front/rear		kg	16425 / 2340	18481 / 1995	20196 / 2265	21565 / 2353
	2.3	Axle load, without load, front/rear		kg	7034 / 5731	7494 / 5892	7622 / 6839	7826 / 8092
Tyres	3.1	Tyres - pneumatic (P), pneumatic shaped cushion (SE), solid rubber (R)			SE	SE	SE	SE
	3.2	Tyre size, front			355/50-20	8.25-15	300-15	300-15
	3.3	Tyre size, rear			8.25-15	8.25-15	300-15	300-15
	3.5	Wheels, number front/rear (x = driven)			2x/2	4x/2	4x/2	4x/2
	3.6	Track width, front	b_{10}	mm	1328	1510	1575	1575
	3.7	Track width, rear	b_{11}	mm	1406	1406	1394	1394
Dimensions	4.1	Tilt of mast/fork carriage forward/backward	α/β	deg	5/8	5/8	5/8	5/8
	4.2	Height, mast lowered	h_1	mm	2620	2720	2620	2820
	4.3	Free lift	h_2	mm	100	100	100	100
	4.4	Lift	h_3	mm	3300	3300	3300	3300
		Lift height	h_{23}	mm	3360	3360	3360	3370
	4.5	Height, mast extended	h_4	mm	4252	4252	4255	4480
	4.7	Height of overhead guard (cab)	h_6	mm	2835	2835	2835	2835
	4.8	Seat height	h_7	mm	1710	1710	1710	1710
	4.12	Coupling height	h_{10}	mm	785	785	785	785
	4.19	Overall length	l_1	mm	4680	4690	4695	5450
	4.20	Length to face of forks	l_2	mm	3480	3490	3495	3650
	4.21	Overall width	b_1	mm	1660	2004	2141	2141
	4.22	Fork dimensions	s/e/l	mm	60x200x1200	60x200x1200	60x200x1200	70x200x1800
	4.23	Fork carriage DIN 15 173, class/type A, B			IVA	IVA	IVA	IVA
	4.24	Fork carriage width	b_3	mm	1600	1700	1700	1700
	4.31	Ground clearance, with load, below mast	m_1	mm	220	220	220	220
	4.32	Ground clearance, centre of wheelbase	m_2	mm	210	210	210	210
	4.33	Aisle width for pallets 1000x1200 crossways	A_{st}	mm	4905	4915	4920	5061
	4.34	Aisle width for pallets 800x1200 lengthways	A_{st}	mm	5105	5115	5120	5261
	4.35	Turning radius	W_a	mm	3005	3005	3005	3111
	4.36	Internal turning radius	b_{13}	mm	753	753	753	753
Performance	5.1	Travel speed, with/without load		km/h	18/20	18/20	17/19	16/18
	5.2	Lift speed, with/without load		m/s	0,38/0,48	0,36/0,48	0,32/0,42	0,32/0,42
	5.3	Lowering speed, with/without load		m/s	0,55/0,45	0,55/0,45	0,55/0,45	0,55/0,45
	5.5	Drawbar pull, with/without load		N	16573/17749	16237/17558	15848/17418	15562/17132
	5.6	Max. drawbar pull, with/without load		N	44600 / 44600	44600 / 44600	40200 / 44600	40200 / 44600
	5.7	Gradeability, with/without load		%	7/11	6,3/10,6	5,6/9,7	5,2/8,7
	5.8	Max. gradeability, with/without load		%	19/29	18/27	13/25	13/23
	5.9	Acceleration time, with/without load		s	5,1/4,7	5,8/5,1	5,8/5,1	6,0/5,2
	5.10	Service brake			Hydraulic	Hydraulic	Hydraulic	Hydraulic
Electric motor	6.1	Drive motor rating S2 60 min		kW	2x 21,2	2x 21,2	2x 21,2	2x 21,2
	6.2	Lift motor rating S3 15%		kW	32	32	32	32
	6.3	Battery acc. to DIN 43 531/35/36 A, B, C, no			DIN 43536 A	DIN 43536 A	DIN 43536 A	DIN 43536 A
	6.4	Battery voltage, nominal capacity K_5		V/Ah	80/1120	80/1120	80/1120	80/1120
	6.5	Battery weight		kg	2785	2785	2785	2785
	6.6	Energy consumption acc. to EN16796			10.5	11.0	13.1	14.5
Others	8.1	Type of drive control			AC	AC	AC	AC
	8.2	Operating pressure for attachments		bar	250	250	250	250
	8.3	Oil volume for attachments		l/min	80	80	80	80
	8.4	Sound level at the driver's ear according to EN12053		dB(A)	65,8	65,8	65,8	65,8

All data are based on table configuration. Other configurations may give other values.
Truck performance and dimensions are nominal and subject to tolerances.
Products and specifications are subject to change without notice.

Mast dimensions and rated capacities

Model			V							FV			FSV						
9FBM60T	Lift height	h_{23}	3360	3760	4060	4560	5060	5560	6060	3360	3760	4060	4360	4760	5060	5560	6060	6560	7060
	Lift	h_3	3300	3700	4000	4500	5000	5500	6000	3300	3700	4000	4300	4700	5000	5500	6000	6500	7000
	Height, mast lowered	h_1	2660	2820	3020	3270	3520	3770	4020	2620	2820	3020	2620	2720	2820	3020	3220	3420	3620
	Height, mast extended	h_4	4252	4652	4985	5485	5985	6485	6985	4320	4720	5020	5280	5680	5980	6480	6980	7510	7980
	Free lift	h_2	100	100	100	100	100	100	100	1615	1815	2015	1655	1755	1855	2055	2255	2455	2655
9FBM70T	Lift height	h_{23}	3360	3760	4060	4560	5060	5560	6060	3360	3760	4060	4360	4760	5060	5560	6060	6560	7060
	Lift	h_3	3300	3700	4000	4500	5000	5500	6000	3300	3700	4000	4300	4700	5000	5500	6000	6500	7000
	Height, mast lowered	h_1	2720	2920	3120	3370	3620	3870	4120	2720	2920	3120	2620	2720	2820	3020	3220	3420	3620
	Height, mast extended	h_4	4337	4737	5037	5537	6037	6520	7020	4280	4680	4980	5280	5680	5980	6480	6980	7480	7980
	Free lift	h_2	100	100	100	100	100	100	100	1740	1940	2140	1640	1740	1840	2040	2240	2440	2640
9FBM80T	Lift height	h_{23}	3360	3760	4060	4560	5060	5560	6060	3360	3760	4060	4360	4760	5060	5560	6060	6560	7060
	Lift	h_3	3300	3700	4000	4500	5000	5500	6000	3300	3700	4000	4300	4700	5000	5500	6000	6500	7000
	Height, mast lowered	h_1	2620	2920	3120	3370	3620	3870	4120	2670	2990	3120	2690	2820	2920	3090	3260	3430	3620
	Height, mast extended	h_4	4255	4720	5070	5570	6070	6570	7070	4293	4693	4993	5280	5680	5980	6480	6980	7480	7980
	Free lift	h_2	100	100	100	100	100	100	100	1677	1927	2127	1710	1840	1940	2110	2280	2450	2640
9FBH80T	Lift height	h_{23}	3370	3770	4070	4570	5070	5570	6070	3370	3770	4070	4370	4770	5070	5570	6070	6570	7070
	Lift	h_3	3300	3700	4000	4500	5000	5500	6000	3300	3700	4000	4300	4700	5000	5500	6000	6500	7000
	Height, mast lowered	h_1	2820	3120	3320	3570	3820	4070	4320	2770	3020	3220	2820	2950	3050	3220	3390	3550	3720
	Height, mast extended	h_4	4480	4920	5270	5770	6270	6770	7270	4323	4723	5023	5575	5975	6275	6775	7275	7775	8275
	Free lift	h_2	100	100	100	100	100	100	100	1747	1997	2197	1545	1675	1775	1945	2115	2275	2445

Single tyre			V							FV			FSV						
9FBM60T	Tilt range, forward	deg	5	5	5	5	5	5	5	5	5	5	5	5	5	5	5	5	5
	Tilt range, Backward	deg	8	8	8	8	8	8	8	8	8	8	8	8	8	8	8	8	8
	Load capacity at 600 mm LC	kg	6000	6000	6000	6000	6000	6000	6000	6000	6000	6000	6000	6000	6000	6000	6000	6000	6000

Dual tyre			V							FV			FSV						
9FBM70T	Tilt range, forward	deg	5	5	5	5	5	5	5	5	5	5	5	5	5	5	5	5	5
	Tilt range, backward	deg	8	8	8	8	8	8	8	8	8	8	8	8	8	8	8	8	8
	Load capacity at 600 mm LC	kg	7000	7000	7000	7000	7000	7000	7000	7000	7000	7000	7000	7000	7000	6700	6700	6200	6200
9FBM80T	Tilt range, forward	deg	5	5	5	5	5	5	5	5	5	5	5	5	5	5	5	5	5
	Tilt range, backward	deg	8	8	8	8	8	8	8	8	8	8	8	8	8	8	8	8	8
	Load capacity at 600 mm LC	kg	8000	8000	8000	8000	8000	8000	7700	8000	8000	8000	8000	8000	8000	8000	7700	7500	7500
9FBH80T	Tilt range, forward	deg	5	5	5	5	5	5	5	5	5	5	5	5	5	5	5	5	5
	Tilt range, backward	deg	8	8	8	8	8	8	8	8	8	8	8	8	8	8	8	8	8
	Load capacity at 900 mm LC	kg	8000	8000	8000	8000	7700	7700	7500	8000	8000	8000	8000	8000	8000	8000	7700	7300	7300

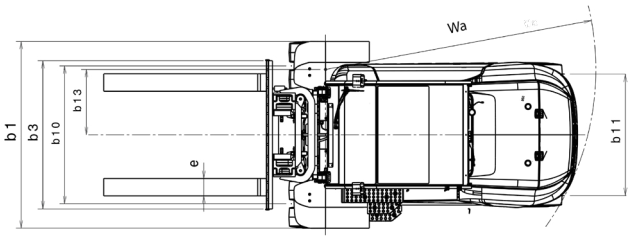

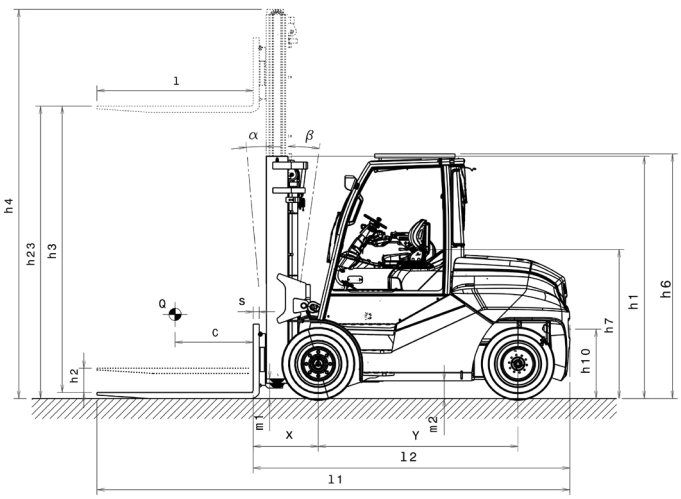

Standard equipments:

- Toyota SAS (System of Active Stability)
- Toyota AC^2 power train
- Toyota OPS (Operator Presence Sensing), Toyota ORS seat (Operator Restraint System)
- Seat mounted hydraulic minilevers
- Wide visible mast [V3300 mm]
- Long forks [length: 1200 mm (9FBM60-80T), 1800 mm (9FBH80T)]
- Automatic parking brake, Wet disc brakes, Wide brake pedal
- 4-way valve
- Electric power steering (EPS)
- Digital multifunction display with wheel indicator
- Telescopic & tiltable steering column
- Pneumatic shaped cushion tyres [single (9FBM60T); dual (9FBM70-80T, 9FBH80T)]
- Floating driver compartment
- Shockless landing lift
- Drive unit protector, Overhead guard protector
- Double assist grip

TOYOTA MATERIAL HANDLING