Electric powered forklift 3.5 - 5.0 ton

TRIGO 80

TOYOTA
MATERIAL HANDLING

toyotamaterialhandling-international.com

Electric powered forklift 3.5 - 5.0 ton

Truck specifications					9FBHK35F	9FBMK40F
Identification	1.1	Manufacturer			Toyota	Toyota
	1.2	Model			9FBHK35F	9FBMK40F
	1.3	Drive			Electric	Electric
	1.4	Operator type			driver seated	driver seated
	1.5	Load capacity/rated load	Q	kg	3500	4000
	1.6	Load centre	c	mm	600	500
	1.8	Load distance, centre of drive axle to fork	x	mm	518	518
	1.9	Wheelbase	y	mm	1886	1886
Weight	2.1	Service weight		kg	6750	6728
	2.2	Axle load, with load, front/rear		kg	8999/1251	9553/1175
	2.3	Axle load, without load, front/rear		kg	3424/3326	3394/3334
Tyres	3.1	Tyres - cushion (C), super elastic (SE), pneumatic (P), twin (TW)			SE	SE
	3.2	Wheel size, front			250 - 15	250 - 15
	3.3	Wheel size, rear			23x9 - 10	23x9 - 10
	3.5	Wheels, number front/rear (x = driven wheels)			2x/2	2x/2
	3.6	Track width, front	b_{10}	mm	1119	1119
	3.7	Track width, rear	b_{11}	mm	1113	1113
Dimensions	4.1	Tilt of mast/fork carriage forward/backward	a/b	deg	5/10	5/10
	4.2	Height, mast lowered	h_1	mm	2500	2500
	4.3	Free lift	h_2	mm	80	80
	4.4	Lift	h_3	mm	3300	3300
		Lift height	h_{23}	mm	3350	3350
	4.5	Height, mast extended	h_4	mm	4156	4156
	4.7	Height of overhead guard (cab)	h_6	mm	2360	2360
	4.8	Seat height/stand height	h_7	mm	1277	1277
	4.12	Coupling height	h_{10}	mm	550	550
	4.19	Overall length	l_1	mm	3953	3753
	4.20	Length to face of forks	l_2	mm	2753	2753
	4.21	Overall width	b_1	mm	1345	1345
	4.22	Fork dimensions	s/e/l	mm	50/150/1200	50/150/1000
	4.23	Fork carriage DIN 15173, class/type A, B			3A	3A
	4.24	Fork-carriage width	b_3	mm	1170	1170
	4.31	Ground clearance, with load, below mast	m_1	mm	150	150
	4.32	Ground clearance, centre of wheelbase	m_2	mm	159	159
	4.33	Aisle width for pallets 1000x1200 crossways	A_{st}	mm	4169	4169
	4.34	Aisle width for pallets 800x1200 lengthways	A_{st}	mm	4369	4369
	4.35	Turning radius	W_a	mm	2451	2451
	4.36	Internal turning radius	b_{13}	mm	704	704
Performance data	5.1	Travel speed, with/without load Standard | Performance		km/h	18/18 | 20/20	18/18 | 20/20
	5.2	Lift speed, with/without load Standard | Performance		m/s	0,38/0,47 | 0,48/0,57	0,37/0,47 | 0,47/0,57
	5.3	Lowering speed, with/without load Standard | Performance		m/s	0,52/0,51 | 0,53/0,52	0,52/0,51 | 0,54/0,52
	5.5	Drawbar pull, with/without load Standard | Performance		N	12420 | 12700	12420 | 12700
	5.6	Max. drawbar pull, with/without load Standard | Performance		N	22000 | 23200	22000 | 23200
	5.7	Gradeability, with/without load Standard | Performance		%	11/17 | 12/19	11/17 | 11/19
	5.8	Max. gradeability, with/without load Standard | Performance		%	15/25 | 21/25	15/25 | 20/25
	5.9	Acceleration time, with/without load Standard | Performance		s	5,6/5,2 | 5,0/4,5	5,8/5,2 | 5,0/4,5
	5.10	Service brake			Mechanical/hydraulic	Mechanical/hydraulic
Electric motor	6.1	Drive motor rating S2 60 min Standard | Performance		kW	25,2 | 27	25,2 | 27
	6.2	Lift motor rating S3 15% Standard | Performance		kW	25,5 | 28,5	25,5 | 28,5
	6.3	Battery according to DIN 43 531/35/36 A, B, C, no			43536	43536
	6.4	Battery voltage, nominal capacity K_5 Standard | Performance		V/Ah	80/700 (80/775) | 90/620	80/700 (80/775) | 90/620
	6.5	Battery weight		kg	1863	1863
	6.6	Energy consumption acc. to EN16796 Standard | Performance		kWh/h	9.6 | 8,8	9,9 | 9,0
Other	8.1	Type of drive control			AC	AC
	8.2	Operating pressure for attachments		bar	180	180
	8.3	Oil volume for attachments Standard | Performance		l/min	40 | 55	40 | 55
	10.7	Sound level at the driver's ear according to EN12053 Std. | Perf.		dB(A)	68	68

All data are based on table configuration. Performance data are referred to truck equipped with 90V battery. Other configurations may give other values.
Truck performance and dimensions are nominal and subject to tolerances.
Products and specifications are subject to change without notice.

Mast dimensions and rated capacities

Model			V							FV/FW				FSV							FSW					
9FBHK35F, 9FBMK40F	Lift height	h_{23}	3050	3350	3750	4050	4550	5050	5550	3050	3350	3750	4050	4200	4450	4750	5050	5550	6050	6550	4450	4750	5050	5550	6050	6550
	Lift	h_3	3000	3300	3700	4000	4500	5000	5500	3000	3300	3700	4000	4150	4400	4700	5000	5500	6000	6500	4400	4700	5000	5500	6000	6500
	Height, mast lowered	h_1	2360	2500	2750	2880	3130	3380	3630	2360	2500	2750	2880	2200	2360	2440	2500	2750	2880	3130	2360	2440	2500	2750	2880	3130
	Height, mast extended 1)	h_4	3856	4156	4560	4856	5356	5856	6356	3890	4190	4590	4890	5040	5290	5590	5890	6390	6890	7390	5290	5590	5890	6390	6890	7390
	Height, mast extended 2)	h_4	4200	4500	4900	5200	5700	6200	6700	4200	4500	4900	5200	5370	5620	5920	6220	6720	7220	7720	5620	5920	6220	6720	7220	7720
	Free lift, without load backrest	h_2	80	80	80	80	80	80	80	1470	1610	1860	1990	1310	1470	1550	1610	1860	1990	2240	1470	1550	1610	1860	1990	2240
	Free lift, with load backrest	h_2	80	80	80	80	80	80	80	1160	1300	1550	1680	980	1140	1220	1280	1530	1660	1910	1140	1220	1280	1530	1660	1910

1) Without load backrest.

2) With load backrest; Height of standard load backrest is 1200 mm.

Pneumatic shaped cushion tyre			V							FV/FW				FSV							FSW					
9FBHK35F	Tilt range, forward	deg	5	5	5	5	5	5	5	5	5	5	5	5	5	5	5	5	5	5	5	5	5	5	5	5
	Tilt range, backward	deg	10(6)	10(6)	10(6)	10(6)	10(6)	10(6)	10(6)	10(6)	10(6)	10(6)	10(6)	6	6	6	6	6	6	6	6	6	6	6	6	6
	Load capacity at 600 mm LC	kg	3500	3500	3500	3500	3500	3500	3500	3500	3500	3500	3500	3500	3500	3500	3500	3500	3500	3500	3500	3500	3500	3500	3500	3500
9FBMK40F	Tilt range, forward	deg	5	5	5	5	5	5	5	5	5	5	5	5	5	5	5	5	5	5	5	5	5	5	5	5
	Tilt range, backward	deg	10(6)	10(6)	10(6)	10(6)	10(6)	10(6)	10(6)	10(6)	10(6)	10(6)	10(6)	6	6	6	6	6	6	6	6	6	6	6	6	6
	Load capacity at 500 mm LC	kg	4000	4000	4000	4000	4000	4000	3850	4000	4000	4000	4000	4000	4000	4000	4000	4000	3900	3800	4000	4000	4000	4000	3900	3800

Data in ( ) are for when ”Cabin Series” or front windshield is selected.

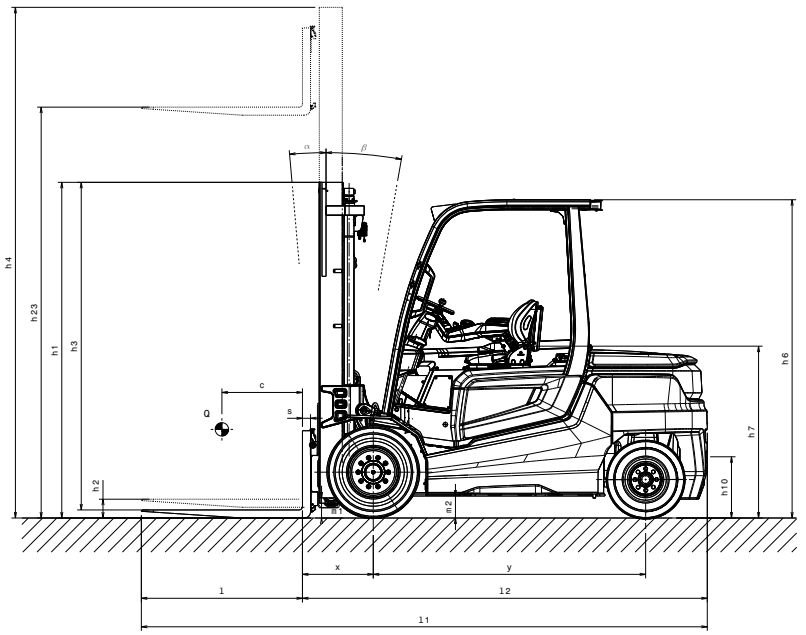

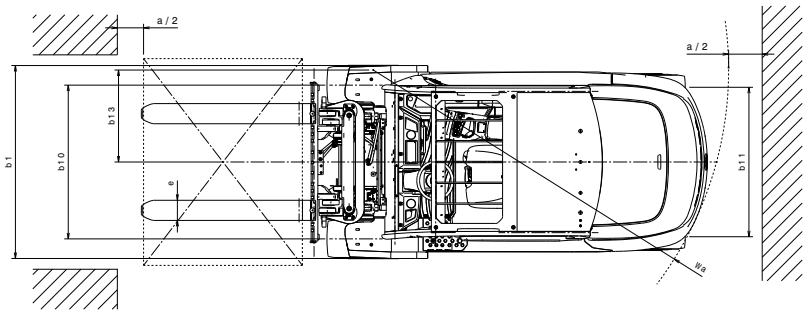

Electric powered forklift 3.5 - 5.0 ton

Truck specifications					9FBH40F	9FBH45F	9FBH50F
Identification	1.1	Manufacturer			Toyota	Toyota	Toyota
	1.2	Model			9FBH40F	9FBH45F	9FBH50F
	1.3	Drive			Electric	Electric	Electric
	1.4	Operator type			driver seated	driver seated	driver seated
	1.5	Load capacity/rated load	Q	kg	4000	4500	4990
	1.6	Load centre	c	mm	600	600	600
	1.8	Load distance, centre of drive axle to fork	x	mm	518	528	528
	1.9	Wheelbase	y	mm	2030	2030	2030
Weight	2.1	Service weight		kg	6933	7511	7836
	2.2	Axle load, with load, front/rear		kg	9938/995	10740/1271	11449/1377
	2.3	Axle load, without load, front/rear		kg	3735/3198	3740/3771	3686/4150
Tyres	3.1	Tyres - cushion (C), super elastic (SE), pneumatic (P), twin (TW)			SE	SE	SE
	3.2	Wheel size, front			250 - 15	28x12,5 - 15	28x12,5 - 15
	3.3	Wheel size, rear			23x9 - 10	23x9 - 10	23x9 - 10
	3.5	Wheels, number front/rear (x = driven wheels)			2x/2	2x/2	2x/2
	3.6	Track width, front	b_{10}	mm	1119	1145	1145
	3.7	Track width, rear	b_{11}	mm	1113	1113	1113
Dimensions	4.1	Tilt of mast/fork carriage forward/backward	a/b	deg	5/10	5/10	5/10
	4.2	Height, mast lowered	h_1	mm	2500	2500	2500
	4.3	Free lift	h_2	mm	80	80	80
	4.4	Lift	h_3	mm	3300	3300	3300
		Lift height	h_{23}	mm	3350	3360	3360
	4.5	Height, mast extended	h_4	mm	4156	4156	4156
	4.7	Height of overhead guard (cab)	h_6	mm	2360	2360	2360
	4.8	Seat height/stand height	h_7	mm	1277	1277	1277
	4.12	Coupling height	h_{10}	mm	550	550	550
	4.19	Overall length	l_1	mm	4097	4157	4218
	4.20	Length to face of forks	l_2	mm	2897	2957	3018
	4.21	Overall width	b_1	mm	1345	1440	1440
	4.22	Fork dimensions	s/e/l	mm	50/150/1200	60/150/1200	60/150/1200
	4.23	Fork carriage DIN 15173, class/type A, B			3A	3A	3A
	4.24	Fork-carriage width	b_3	mm	1170	1170	1170
	4.31	Ground clearance, with load, below mast	m_1	mm	150	150	150
	4.32	Ground clearance, centre of wheelbase	m_2	mm	159	149	149
	4.33	Aisle width for pallets 1000x1200 crossways	A_{st}	mm	4324	4355	4411
	4.34	Aisle width for pallets 800x1200 lengthways	A_{st}	mm	4524	4555	4611
	4.35	Turning radius	W_a	mm	2606	2627	2683
	4.36	Internal turning radius	b_{13}	mm	758	758	758
Performance data	5.1	Travel speed, with/without load Standard | Performance		km/h	18/18 | 20/20	18/18 | 20/20	18/18 | 20/20
	5.2	Lift speed, with/without load Standard | Performance		m/s	0,36/0,47 | 0,47/0,57	0,34/0,45 | 0,43/0,50	0,33/0,45 | 0,41/0,50
	5.3	Lowering speed, with/without load Standard | Performance		m/s	0,52/0,51 | 0,54/0,52	0,47/0,45 | 0,50/0,46	0,48/0,45 | 0,55/0,46
	5.5	Drawbar pull, with/without load Standard | Performance		N	12420 | 12700	13000 | 13400	13000 | 13400
	5.6	Max. drawbar pull, with/without load Standard | Performance		N	22000 | 23200	22000 | 24500	22000 | 24500
	5.7	Gradeability, with/without load Standard | Performance		%	10/17 | 11/19	9/16 | 10/18	8/15 | 9/16
	5.8	Max. gradeability, with/without load Standard | Performance		%	15/25 | 19/25	14/24 | 18/24	13/23 | 16/26
	5.9	Acceleration time, with/without load Standard | Performance		s	5,8/5,4 | 5,0/4,6	6,0/5,6 | 5,1/4,7	6,1/5,6 | 5,3/4,6
	5.10	Service brake			Mechanical/hydraulic	Mechanical/hydraulic	Mechanical/hydraulic
Electric motor	6.1	Drive motor rating S2 60 min Standard | Performance		kW	25,2 | 27	25,2 | 27	25,2 | 27
	6.2	Lift motor rating S3 15% Standard | Performance		kW	25,5 | 28,5	25,5 | 28,5	25,5 | 28,5
	6.3	Battery according to DIN 43 531/35/36 A, B, C, no			43536	43536	43536
	6.4	Battery voltage, nominal capacity K_5 Standard | Performance		V/Ah	80/840 (80/930) | 90/775	80/840 (80/930) | 90/775	80/840 (80/930) | 90/775
	6.5	Battery weight		kg	2178	2178	2178
	6.6	Energy consumption acc. to EN16796 Standard | Performance		kWh/h	10.6 | 9,5	11,2 | 10,8	11,7 | 11,5
Other	8.1	Type of drive control			AC	AC	AC
	8.2	Operating pressure for attachments		bar	180	180	180
	8.3	Oil volume for attachments Standard | Performance		l/min	40 | 55	40 | 55	40 | 55
	10.7	Sound level at the driver's ear according to EN12053 Std. | Perf.		dB(A)	68 | 67	68 | 67	68 | 67

All data are based on table configuration. Performance data are referred to truck equipped with 90V battery. Other configurations may give other values.
Truck performance and dimensions are nominal and subject to tolerances.
Products and specifications are subject to change without notice.

Mast dimensions and rated capacities

Model			V							FV/FW				FSV							FSW					
9FBH40F	Lift height	h_{23}	3050	3350	3750	4050	4550	5050	5550	3050	3350	3750	4050	4200	4450	4750	5050	5550	6050	6550	4450	4750	5050	5550	6050	6550
	Lift	h_3	3000	3300	3700	4000	4500	5000	5500	3000	3300	3700	4000	4150	4400	4700	5000	5500	6000	6500	4400	4700	5000	5500	6000	6500
	Height, mast lowered	h_1	2360	2500	2750	2880	3130	3380	3630	2360	2500	2750	2880	2200	2360	2440	2500	2750	2880	3130	2360	2440	2500	2750	2880	3130
	Height, mast extended 1)	h_4	3856	4156	4560	4856	5356	5856	6356	3890	4190	4590	4890	5040	5290	5590	5890	6390	6890	7390	5290	5590	5890	6390	6890	7390
	Height, mast extended 2)	h_4	4200	4500	4900	5200	5700	6200	6700	4200	4500	4900	5200	5370	5620	5920	6220	6720	7220	7720	5620	5920	6220	6720	7220	7720
	Free lift, without load backrest	h_2	80	80	80	80	80	80	80	1470	1610	1860	1990	1310	1470	1550	1610	1860	1990	2240	1470	1550	1610	1860	1990	2240
	Free lift, with load backrest	h_2	80	80	80	80	80	80	80	1160	1300	1550	1680	980	1140	1220	1280	1530	1660	1910	1140	1220	1280	1530	1660	1910
9FBH45F, 9FBH50F	Lift height	h_{23}	3060	3360	3760	4060	4560	5060	5560	2860	3360	3760	4060	4060	4360	4760	5060	5560	6060	6560	4360	4760	5060	5560	6060	6560
	Lift	h_3	3000	3300	3700	4000	4500	5000	5500	2800	3300	3700	4000	4000	4300	4700	5000	5500	6000	6500	4300	4700	5000	5500	6000	6500
	Height, mast lowered	h_1	2360	2500	2750	2880	3130	3380	3630	2360	2630	2880	3130	2200	2360	2500	2630	2880	3130	3380	2360	2500	2630	2880	3130	3380
	Height, mast extended 1)	h_4	3956	4156	4560	4856	5356	5856	6356	3690	4190	4590	4890	4890	5190	5590	5890	6390	6890	7390	5190	5590	5890	6390	6890	7390
	Height, mast extended 2)	h_4	4200	4500	4900	5200	5700	6200	6700	4000	4500	4900	5200	5200	5500	5900	6200	6700	7200	7700	5500	5900	6200	6700	7200	7700
	Free lift, without load backrest	h_2	80	80	80	80	80	80	80	1470	1740	1990	2240	1310	1470	1610	1740	1990	2240	2490	1470	1610	1740	1990	2240	2490
	Free lift, with load backrest	h_2	80	80	80	80	80	80	80	1160	1430	1680	1930	1000	1160	1300	1430	1680	1930	2180	1160	1300	1430	1680	1930	2180

1) Without load backrest.

2) With load backrest; Height of standard load backrest is 1200 mm.

Pneumatic shaped cushion tyre			V							FV/FW				FSV							FSW					
9FBH40F	Tilt range, forward	deg	5	5	5	5	5	5	5	5	5	5	5	5	5	5	5	5	5	5	5	5	5	5	5	5
	Tilt range, backward	deg	10(6)	10(6)	10(6)	10(6)	10(6)	10(6)	10(6)	10(6)	10(6)	10(6)	10(6)	6	6	6	6	6	6	6	6	6	6	6	6	6
	Load capacity at 600 mm LC	kg	4000	4000	4000	4000	4000	4000	4000	4000	4000	4000	4000	4000	4000	4000	4000	4000	4000	3750	4000	4000	4000	4000	4000	3600
9FBH45F	Tilt range, forward	deg	5	5	5	5	5	5	5	5	5	5	5	5	5	5	5	5	5	5	5	5	5	5	5	5
	Tilt range, backward	deg	10(6)	10(6)	10(6)	10(6)	10(6)	10(6)	10(6)	10(6)	10(6)	10(6)	10(6)	6	6	6	6	6	6	6	6	6	6	6	6	6
	Load capacity at 600 mm LC	kg	4500	4500	4500	4500	4500	4500	4500	4500	4500	4500	4500	4500	4500	4500	4500	4500	4500	3850	4500	4500	4500	4500	4500	4500
9FBH50F	Tilt range, forward	deg	5	5	5	5	5	5	5	5	5	5	5	5	5	5	5	5	5	5	5	5	5	5	5	5
	Tilt range, backward	deg	10(6)	10(6)	10(6)	10(6)	10(6)	10(6)	10(6)	10(6)	10(6)	10(6)	10(6)	6	6	6	6	6	6	6	6	6	6	6	6	6
	Load capacity at 600 mm LC	kg	4990	4990	4990	4990	4990	4990	4990	4990	4990	4990	4990	4990	4990	4990	4990	4800	4750	3850	4990	4990	4990	4900	4750	4280

Data in ( ) are for when "Cabin Series" or front windshield is selected.

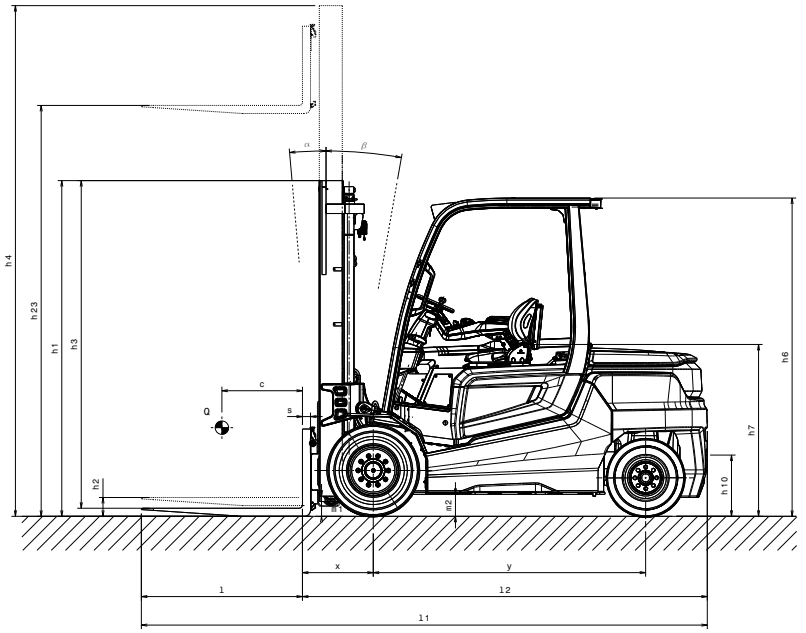

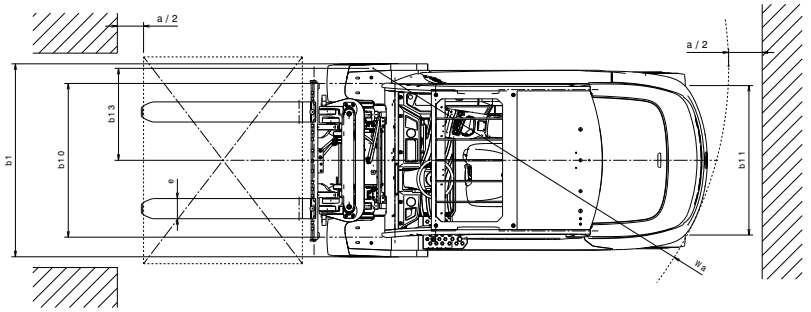

Standard equipments:

- Toyota SAS (System of Active Stability)
- Toyota AC power system
- Wet disc brakes
- 3 valves - no hoses or mast piping for 3rd valve
- Full hydraulic power steering
- Toyota ORS seat (Operator Restraint System)
- Full floating driver compartment
- Assist grip (LH)
- Instrument panel cup holder
- Open chassis design suitable for lateral battery exchange
- Battery door opening sensor
- Wide visible mast [V3300 mm]
- Load backrest [height: 1220 mm]
- Long forks [length: 1000 mm (9FBMK40F)]
- Long forks [length: 1200 mm (9FBHK35F, 9FBH40F, 9FBH45F, 9FBH50F)]
- Seat mounted mini-lever control system
- Horn in armest
- Digital multifunction display with wheel indicator
- Multifunction display
- Remaining operating time indicator on main display
- Automatic parking brake
- Wide brake pedal
- Seat belt lock recognition linked with OPS
- Orange seatbelt
- Emergency stop button on armest
- Operator presence system (OPS)

TOYOTA MATERIAL HANDLING